8-5 Capacitance Test Method – Etched Foil for Anode, Low Voltage 1 of 3

1. Scope of Test

Etched Foil for Anode, Low Voltage

2.Definitions of Technical Codes

1) Vfs : Nominal Formation Voltage
2) Vfe : Voltage across Terminals
3) Vt : Dielectric Withstanding Voltage

3.Test Procedure

1) The following tests and measurements shall be performed on the same test specimen.
2) Procedure ①Specified Formation
②Vt Measurement
③Capacitance Measurement

4.Test Equipment for Formation

1) DC Power Supply
Ripple Content : 2% or less for 50,60Hz
1% or less for 100,120Hz
DC Voltage Stability : ±3%
2) DC Voltmeter
Internal Resistance : 1MΩ or higher
Accuracy : ±0.5%
3) DC Ammeter
Internal Resistance shall be sufficiently small compared to Load Resistance (10Ω or less)
4) Formation Vessel
Material : SUS304
Volume : Approx. 1L
Temperature Control Capable of maintaining the solution temperature at 85±2℃ or at 88±2℃.
5) Counter Electrode
Formation Vessel : SUS304
6) Heat Treatment Device
Temperature Control: Capable of maintaining 500±25℃

5. Test Equipment for Vt Measurement

1) DC Power Supply
Ripple Content : 2% or less for 50,60Hz
1% or less for 100,120Hz
DC Voltage Stability : ±3%
2) DC Voltmeter
Internal Resistance : 1MΩ or higher
Accuracy : ±0.5%
3) DC Ammeter
Internal Resistance shall be sufficiently small compared to Load Resistance (10Ω or less)
4) Measurement Vessel
Material : SUS304
Volume : 500±50ml
Depth : 100±20mm
5) Counter Electrode
Measurement Vessel : SUS304
6) Volt Recorder
Internal Resistance : 1MΩ or higher
Accuracy : ±0.5%

6.Test Equipment for Capacitance Measurement

1) Capacitance Measurement Device
Capacitance Meter in accordance with JIS C 5101-1,4.7
Measurement Frequency : 120Hz±5%
Measurement Voltage : 0.5Vrms or less
DC Bias Voltage : 1.5V
2) Measurement Vessel
Material : Glass
Volume : 200ml or 300ml
3) Counter Electrode
Material : Platinum plate of 40,000μF or higher

7. Test Specimen

Test Specimen : In accordance with *8-1 Selecting Test Specimens for Electrical Characteristics Measurements.*

8. Formation

1) Solution A: Ammonium Adipate
Ammonium Adipate : 150g
Deionized Water : 1,000ml
Specific Resistance : 6.5(+2.0 −1.5)Ωm/70±2℃
pH : 6.7(+0.5 −1.5) /50±2℃
2) Solution P: Ammonium Dihydrogen Phosphate
Ammonium Dihydrogen Phosphate : 1.4g
Deionized Water : 1,000ml
Specific Resistance : 390±15Ωcm/70±2℃
pH : 4.8±0.5 /50±2℃
3) Formation Circuit

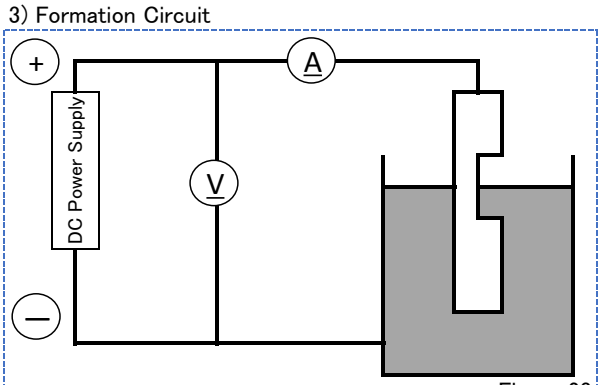

Figure 23

The test specimen shall be immersed in the measuring electrolyte so that the top edge of the Projected Area (area to be measured) is 8-15mm below the surface.

4) Formation Conditions for 20.5Vfs and 65.5Vfs

Process	Items	Unit	Conditions
Formation ①	Vfe	V	Varies by Foil
	Current Density	mA/cm²	50
	Temperature	℃	85±2
	Time	min	10±1
	Formation Electrolyte	—	Solution A
Deionized Water Wash	–	℃	Room Temperature
Heat Treatment	Temperature	℃	500±25
	Time	min.	2±0.2
Formation ②	Vfe	V	Varies by Foil
	Current Density	mA/cm²	50
	Temperature	℃	85±2
	Time	min	2±0.2
	Formation Electrolyte	—	Solution A
Deionized Water Wash	–	℃	Room Temperature
Formation Procedure			Figure 24

5) Formation Conditions for 132Vfs

Process	Items	Unit	Conditions
Formation ①	Vfe	V	Varies by Foil
	Current Density	mA/cm²	50
	Temperature	℃	85±2
	Time	min	10±1
	Formation Electrolyte	—	Solution A
Deionized Water Wash	–	℃	Room Temperature
Heat Treatment	Temperature	℃	500±25
	Time	min.	2±0.2
Formation ②	Vfe	V	Varies by Foil
	Current Density	mA/cm²	50
	Temperature	℃	88±2
	Time	min	2±0.2
	Formation Electrolyte	—	Solution P
Deionized Water Wash	–	℃	Room Temperature
Formation Procedure			Figure 24

6) Formation Procedure

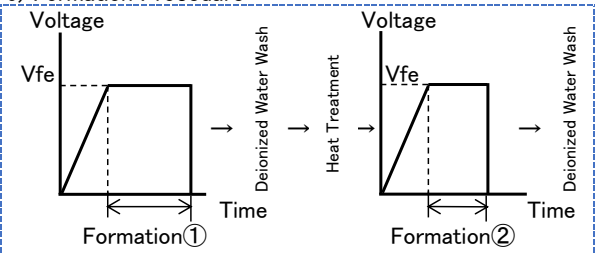

Figure 24

9. Vt Measurement

1) Electrolyte for Vt Measurement

Ammonium Adipate : 150g
Deionized Water : 1,000ml
Specific Resistance : 6.5(+2.0 −1.5)Ωcm/70±2℃
pH : 6.7(+0.5 −1.5) /50±2℃

2) Conditions for Vt Measurement

Measurement Temperature :85±2℃
Current Density :1.0±0.1mA/ 1Test Specimen 5cm²

3) Measurement Circuit

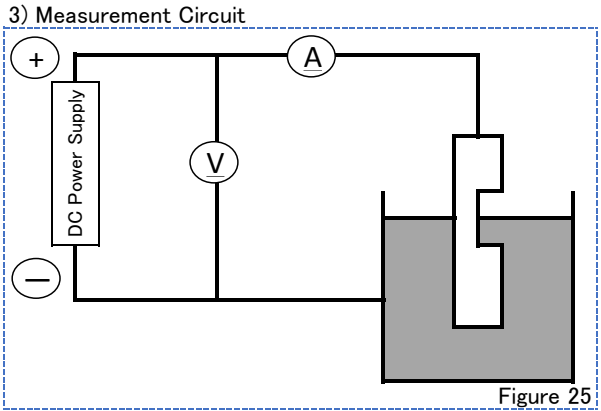

Figure 25

4) Measurement Method

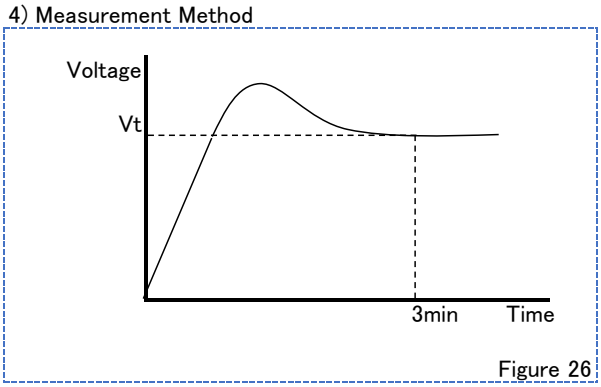

Figure 26

①The test specimen shall be immersed in the measuring electrolyte so that the top edge of the Projected Area (area to be measured) is 6-8mm below the surface.
②The increase in voltage shall be measured after applying constant DC current.
③Dielectric Withstanding Voltage (Vt) shall be defined as the voltage measured 3 minutes after applying DC current.

10. Capacitance Measurement

1) Electrolyte for Capacitance Measurement

Ammonium Adipate	: 150g
Deionized Water	: 1,000ml
Specific Resistance	: 6.5(+2.0 −1.5)Ωcm/70±2℃
pH	: 6.7(+0.5 −1.5) /50±2℃

2) Condition for Capacitance Measurement

Measurement Temperature : 30±2℃

3) Measurement Circuit

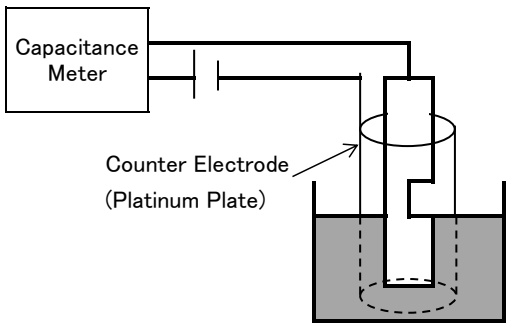

Figure 27

The test specimen shall be immersed in the measuring electrolyte so that the top edge of the Projected Area (area to be measured) is level with the surface.

4) Measurement Calculation

Capacitance per 1cm² is calculated by the following formula

$$C = \frac{Vtm \times Cm}{\text{Specified } Vt \times 5}$$

Where : Specified Vt = Varies by Foil
: Vtm = Measured Value (V)
: Cm = Measured Value (μF)
: C = Capacitance (μF/cm²) per 1cm²